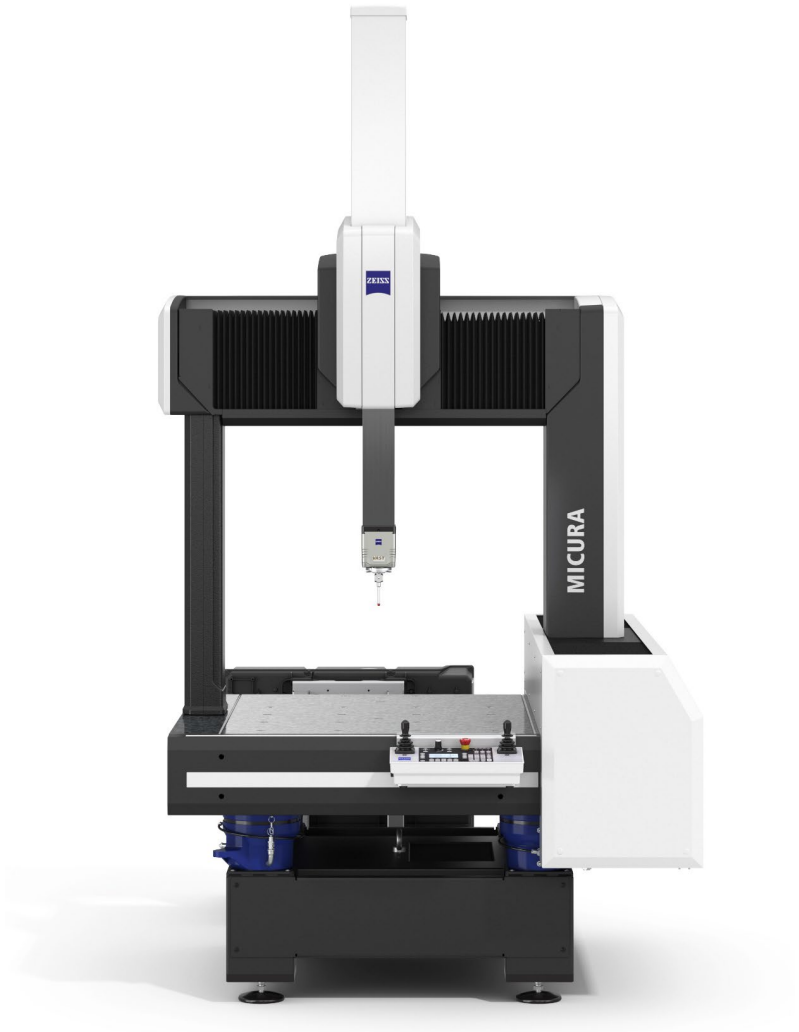

Product Presentation
ZEISS MICURA

Maximum Precision for Small Parts

Product Presentation
Our Pleased Customers



“It has the accuracy we require. That’s why we trust in the results we’re getting.”

Maria San Filippo
Quality Manager at FUTEK Advanced Sensor Technology, Inc.

Product Presentation
Our Pleased Customers



Product Presentation
ZEISS MICURA

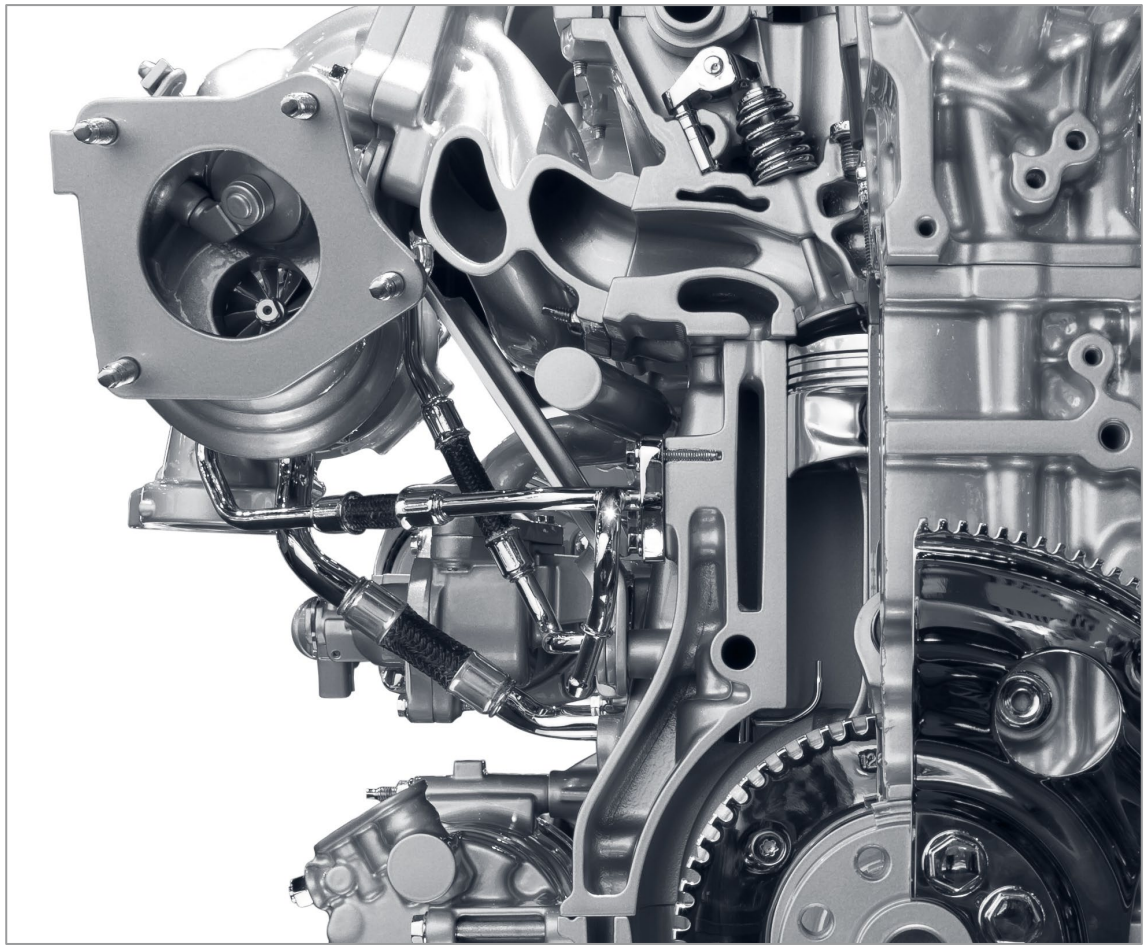

WHY?
To produce high-precision but small components, the **production process** must be **optimally adjusted and validated**.

HOW?
We enable **unquestionable and real information** of the manufactured parts, in order to always be the owner of production.

WHAT?
ZEISS MICURA is the ideal measuring system for **tactile inspection of high-precision components**.

Product Presentation
Fields of Applications by Industry

Automotive

Aerospace

Industry



Electronics

Medical

Product Presentation
Fields of Applications by Industry

Automotive

- Valves
- Connection rods
- Manifolds
- Gauges

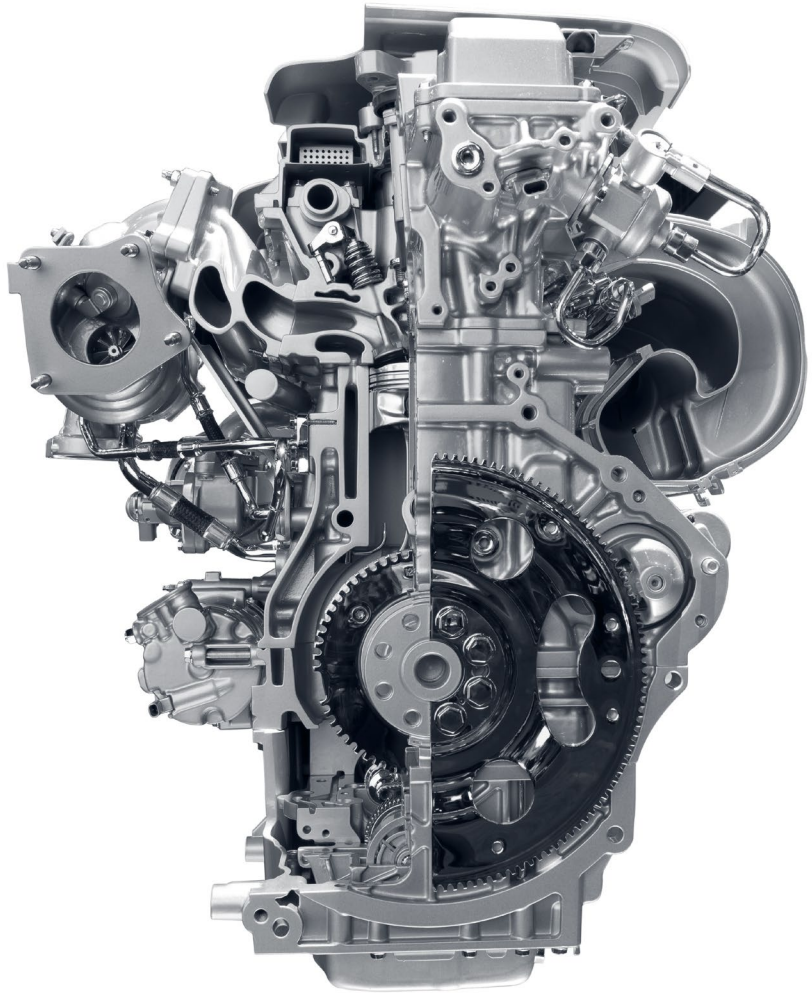

Product Presentation
Fields of Applications by Industry

Industry

- Precision bearings
- Precision valves
- Carbide tipped drills
- Molds
- Gauges



Product Presentation
Fields of Applications by Industry

Aerospace

- Turbine blades
- Valve manifolds
- Precision machined parts

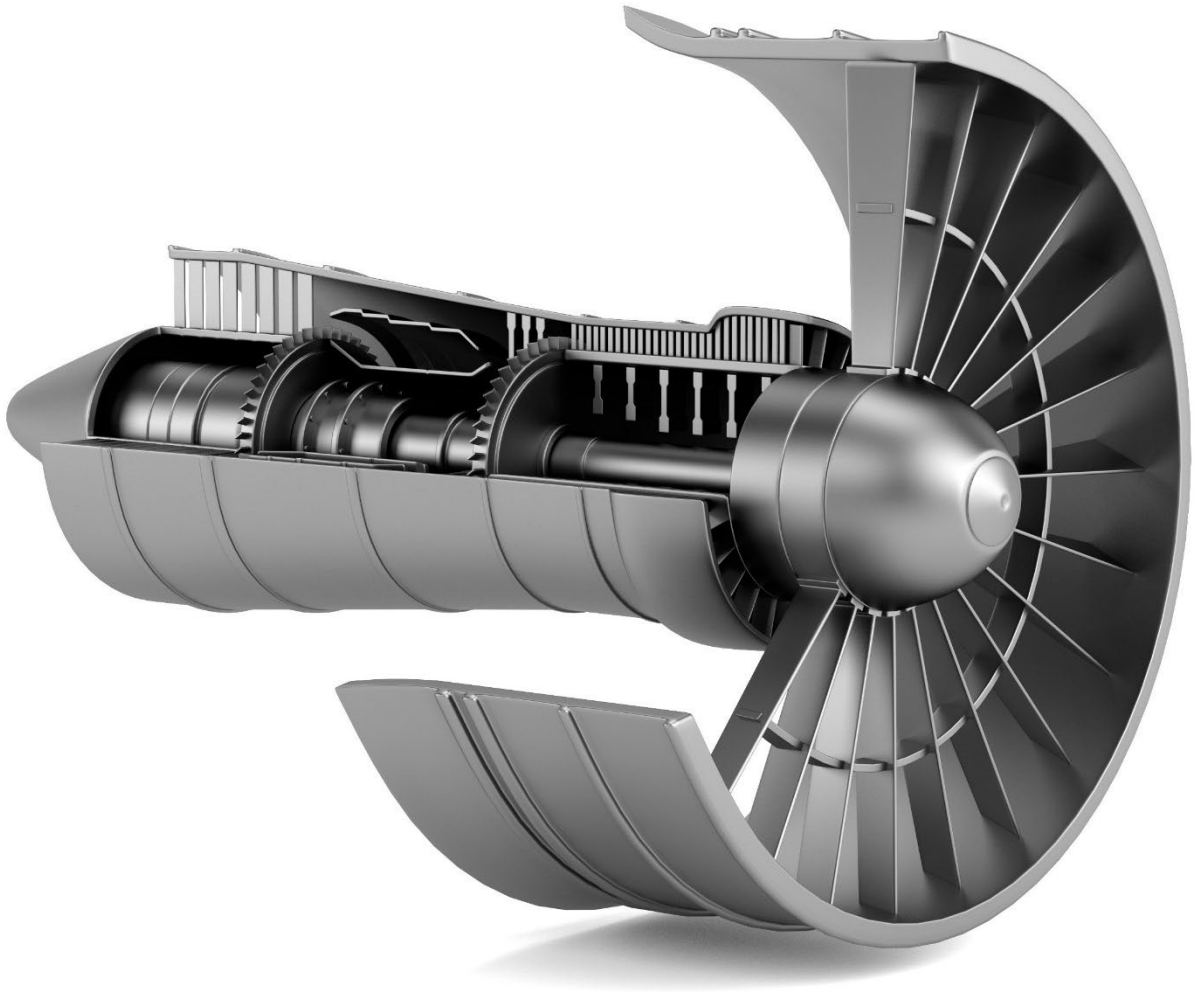

Product Presentation
Fields of Applications by Industry

Electronics

- Connectors



Product Presentation
Fields of Applications by Industry

Medical

- Hip implants
- Knee implants
- LVAD devices



Product Presentation // ZEISS MICURA

Reasons to buy…

01 Faster without loosing accuracy

02 Results you can trust

03 Flexible sensor: ZEISS VAST XT gold

04 Cost effectiveness

05 Increased productivity

06 Reliability

07 Flexibility

08 Worldwide sales and service

09 Software: ZEISS CALYPSO

Product Presentation // ZEISS MICURA

Reasons to buy…

01 Faster without loosing accuracy

02 Results you can trust

03 Flexible sensor: ZEISS VAST XT gold

04 Cost effectiveness

05 Increased productivity

06 Reliability

07 Flexibility

08 Worldwide sales and service

09 Software: ZEISS CALYPSO

Product Presentation
Guaranteed accuracy

ZEISS VAST Navigator

Technical explanation and example

- **D-CAA** to compensate for the dynamic distortion of machine geometry
- **Dynamic correction** of probe distortion
- **Centrifugal force** compensation
- Ongoing monitoring of CMM behavior



How you benefit

- Allows increased scanning speed without measuring deviations
- Software handles optimum scanning speed on its own for less user errors.
- Reliable and repeatable measurement results

Product Presentation // ZEISS MICURA

Reasons to buy…

01 Faster without loosing accuracy

02 Results you can trust

03 Flexible sensor: ZEISS VAST XT gold

04 Cost effectiveness

05 Increased productivity

06 Reliability

07 Flexibility

08 Worldwide sales and service

09 Software: ZEISS CALYPSO

Active Scanning Technology

Technical explanation and example

- Continuous monitoring of the measuring force ensures a stable and reproducible result.
- Measurement is independent of various friction and/or stylus bending effects during scanning and form and position errors.

How you benefit

- Guarantees precise and reliable measuring results regardless of unknown dimensional, form or positioning errors.
- Less sensitive to vibrations and other external influences.

Product Presentation // ZEISS MICURA

Reasons to buy…

01 Faster without loosing

02 Results you can trust

03 Flexible sensor: ZEISS VAST XT gold

04 Cost effectiveness

05 Increased productivity

06 Reliability

07 Flexibility

08 Worldwide sales and service

09 Software: ZEISS CALYPSO

Product Presentation

Our most flexible sensor: ZEISS VAST XT gold



Technical explanation and example

- Active measuring heads can apply active measuring forces.
- A constant low measuring force applied by the probe reduces dynamic influences like probe bending.

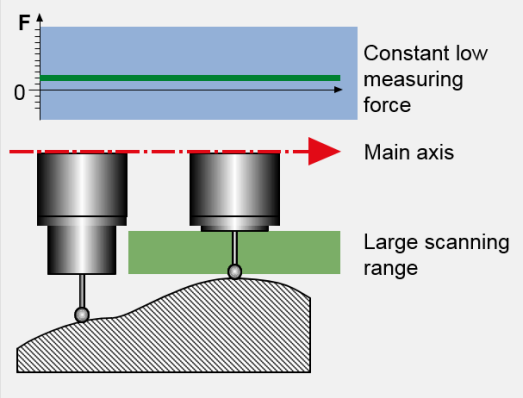

How you benefit

- Guarantees precise and reliable measuring results regardless of unknown dimensional, form or positioning errors.
- Less sensitive to vibrations or other external influences.

Product Presentation // ZEISS MICURA

Reasons to buy…

01 Faster without loosing accuracy

02 Results you can trust

03 Flexible sensor: ZEISS VAST XT gold

04 Cost effectiveness

05 Increased productivity

06 Reliability

07 Flexibility

08 Worldwide sales and service

09 Software: ZEISS CALYPSO

Product Presentation
Cost effectiveness

ZEISS AirSaver Sensor



Technical explanation and example

- ZEISS AirSaver automatically switches off the compressed air after a period of time.
- When a CNC measuring program is started measuring device is immediately ready for operation again.

How you benefit

Reduction of operating costs due to small footprint and AirSaver as standard – e.g. up to **60 % less air consumption**.

Product Presentation // ZEISS MICURA

Reasons to buy…

01 Faster without loosing accuracy

02 Results you can trust

03 Flexible sensor: ZEISS VAST XT gold

04 Cost effectiveness

05 Increased productivity

06 Reliability

07 Flexibility

08 Worldwide sales and service

09 Software: ZEISS CALYPSO

Two Temperature Sensors Come Standard

Technical explanation and example

- Temperature sensors provide information about the actual expansion of the component.
- This makes it possible to calculate back to the standard temperature and the standard tolerance.

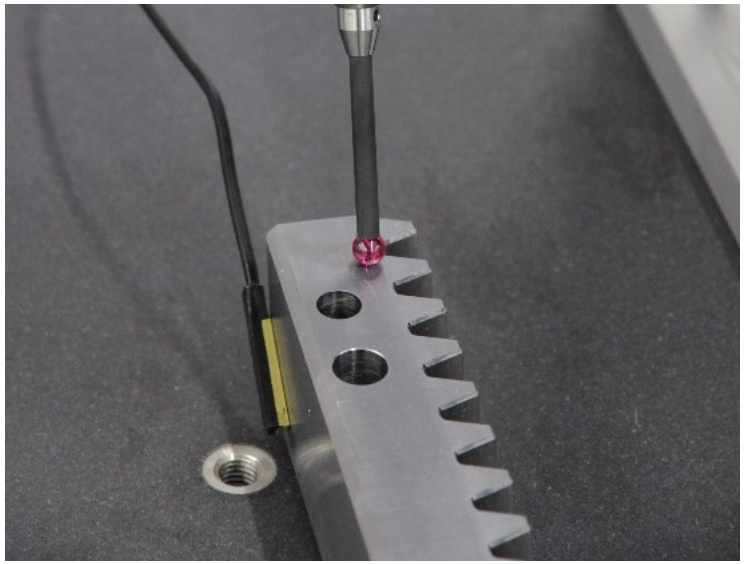

How you benefit

Save operating time where it matters by measuring directly without cooling down time.

Example

The component to be measured comes directly from production and is still heated during the manufacturing process. Without temperature sensors, a cooling time must be taken into account.

Product Presentation // ZEISS MICURA

Reasons to buy…

01 Faster without loosing accuracy

02 Results you can trust

03 Flexible sensor: ZEISS VAST XT gold

04 Cost effectiveness

05 Increased productivity

06 Reliability

07 Flexibility

08 Worldwide sales and service

09 Software: ZEISS CALYPSO

Product Presentation
Reliability

Leading Hardware Technologies

Technical explanation and example

- **ZERODUR scales**
  The float-mounted scales significantly reduce the influence from torsions of the base frame.
- **Ceramic components**
  Ceramics are stiff and have a lower CTE than metals.
- **Long bearing base**
  Longer bearing bases guarantee a higher stiffness against bending, pitching and yawing
- **CAA corrections**
  Dynamic and static bending corrections are state of the art.



How you benefit

- The influences from temperature gradients on the accuracy of the ZEISS MICURA are reduced to a minimum by the floating ZERODUR scales. “The best correction is correction you don’t need!”
- Ceramic components and the long bearing base ensure accuracy and reproducibility.

Product Presentation // ZEISS MICURA

Reasons to buy…

01 Faster without loosing accuracy

02 Results you can trust

03 Flexible sensor: ZEISS VAST XT gold

04 Cost effectiveness

05 Increased productivity

06 Reliability

07 Flexibility

08 Worldwide sales and service

09 Software: ZEISS CALYPSO

Product Presentation
Flexibility

The Perfect Fitting System

Technical explanation and example

Various options are available for the CMM, which allow for an extension ranging from a manual loading system to robot integration.



Manual loading system – e.g. ZEISS CONTURA



Robotic loading system – e.g. ZEISS DuraMax

How you benefit

- Increase throughput by a high degree of automation
- ZEISS is a trustworthy and long-term partner for individual solutions

Product Presentation // ZEISS MICURA

Reasons to buy…

01 Faster without loosing accuracy

02 Results you can trust

03 Flexible sensor: ZEISS VAST XT gold

04 Cost effectiveness

05 Increased productivity

06 Reliability

07 Flexibility

08 Worldwide sales and service

09 Software: ZEISS CALYPSO

Product Presentation
Worldwide sales and Services

Our Global Know-how: ZEISS IQR Network

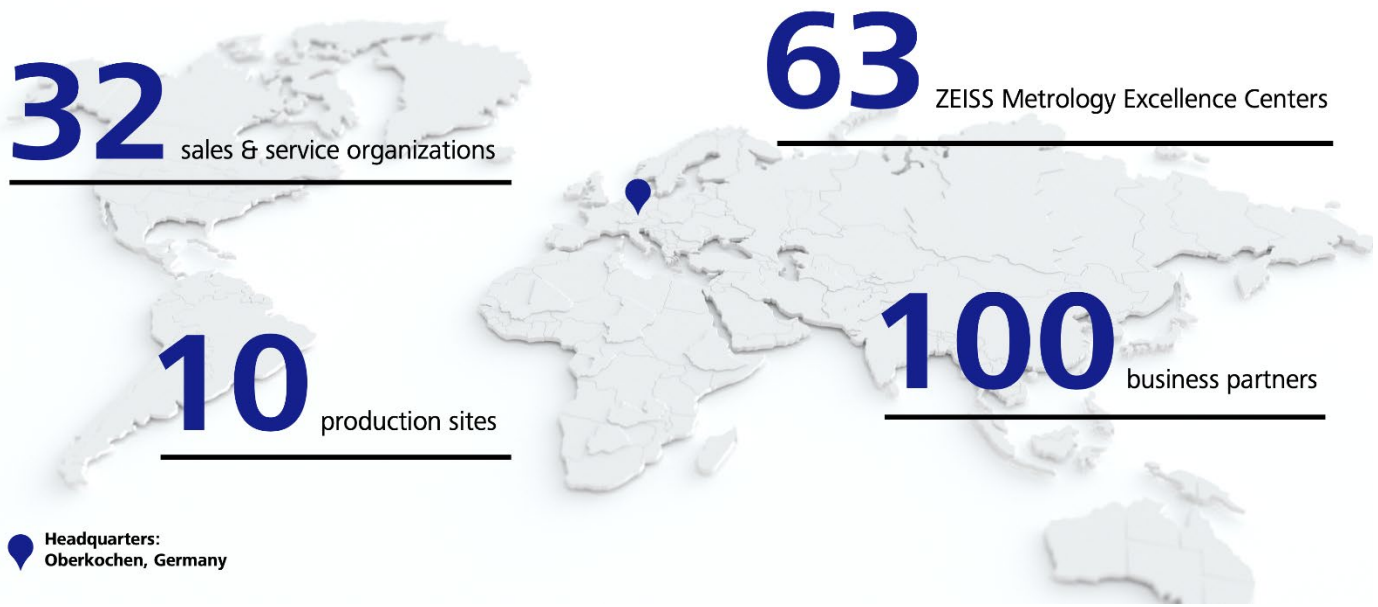

How you benefit

- ZEISS know-how & application technicians available globally.
- Service & support very close to the customer means fast reaction times.
- Less downtime and more security.

Product Presentation // ZEISS MICURA

Reasons to buy…

01 Faster without loosing accuracy

02 Results you can trust

03 Flexible sensor: ZEISS VAST XT gold

04 Cost effectiveness

05 Increased productivity

06 Reliability

07 Flexibility

08 Worldwide sales and service

09 Software: ZEISS CALYPSO

Product Presentation
Software: ZEISS CALYPSO

One for all

Technical explanation and example

- ZEISS CALYPSO enables a consistency and compatibility across all ZEISS CMMs with additional features like ZEISS GEAR PRO measurements.
- Operate various ZEISS CMMs with one training.

How you benefit

- Cost saving because of fewer training hours.
- More efficient operation thanks to a familiar user interface.
- A CNC will run on different ZEISS CMMs immediately.
- Optimized software for specific applications.

CALYPSO

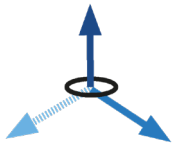

ZEISS CMMs

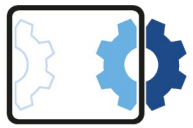

ZEISS X-Ray



ZEISS Sensors

Product Presentation
Configuration standards



Size
- Size 5/7/6

Probe head
- VAST XT gold
- VAST XTR gold

Accessories
- Styli exchange system
- Loading system

Software
- ZEISS CALYPSO



Seeing beyond